Sun Petrochemicals Private Limited

(SunPetro)

Commercial & Supply Chain Management
8th Floor, ATL Corporate Park, Opp. L&T Gate no. 7,
Saki Vihar Road, Chandivali, Powai
Andheri (E), Mumbai – 400072, Maharashtra [INDIA]
www.sunpetro.com
CIN: U24219GJ1995PTC028519

No. SunPetro/Gujarat/Well Fluid/2023-24/SPPL-164/Bulletin-7 **Date:08.03.2024**

BULLETIN #7

Sub: Additional Well Fluid Processing Train & Associated Equipment at CPF, Bhaskar Field.

Ref: Tender No.: SunPetro/Gujarat/Well Fluid/2023-24/SPPL-164

Sun Petrochemicals Private Limited (**SunPetro**), hereby authorized following amendment / clarification in the above referred Tender:

Revised Scope of Work / Responsibility Matrix / Price Schedule
Bidder to note the changes incorporated in tender Section-4, Section-5 & Section-7 as below and remaining section of the tender remains unchanged:

1	**Scope of Work (Section-4)**	Modification in Scope of Work are as per following clause, highlighted in **Blue Font** and deletion is strike through – ***Refer Section-4A & 5A*** **1. Section – 4: Scope of Work** I. Clause: C. a. 6 - Requirement of TVRU added II. Clause: C. a. 7 - Requirement of Expansion Tank added III. Clause: C. b. 18 - Requirement of TVRU added IV. Clause: C. b. 34 - Interconnection **2. Section – 5: Responsibility Matrix** I. Clause: 1. e - Tank Vapour Recovery Column II. Clause: 4. E - Tank Vapour Recovery Column III. Clause: 4. F - HoU with Expansion tank and strengthening of existing Supports
2	**Responsibility Matrix (Section-5)**	
3	**Price Schedule (Section-7)**	Proposed changes done in Price Schedule are as per following clause and highlighted in **Blue Font** and deleted requirement is indicated as strike through. I. Clause: B. B1 - Supply of Package – HP Separator (including gas measurement) II. Clause: B. B2 - Supply of Package – LP Separator (including gas measurement) III. Clause: B. B5 - Supply of Package – Tank Vapour Recovery Unit IV. Clause: B. B6 - Supply of Package – Hot oil unit with Expansion Tank V. Clause: C. C9 - Procurement of CTM Skid VI. Clause: D. D7 - Installation of TVRU VII. Clause: D. D8 - Installation of HoU with Expansion tank VIII. Clause: D.D18 - CTM Skid Installation

		Considering the changes in SOW and in Price Schedule, Bidder to quote as per revised Price Schedule format as attached at Section-7A below. **Submission of Bid-** Your wax sealed bid (ENVELOPE-I and ENVELOPE-II), complete in every respect & strictly in accordance with the Terms & condition in the Tender Documents, are to be submitted through one waxed envelope containing both envelops as described above, at the reception of "Tendering Office" as detailed above, on or before Due date of Submission. **Bidders who have already submitted the bid documents at SunPetro tendering office, they are requested to re-submit the bid document, complete in all respect on or before due date and time of bid submission.**

All other terms and conditions of the tender remain unchanged.

Regards,

Sun Petrochemicals Pvt. Ltd

REVISED

❖ SCOPE OF WORK (Section-4A)

❖ RESPONSIBILITY MATRIX (Section-5A)

❖ PRICE SCHEDULE (Section-7A)

SECTION-4A

SCOPE OF WORK

SCOPE OF WORK FOR DESIGN, ENGINEERING, PROCUREMENT, FABRICATION, TRANSPORTATION, INSTALLATION & COMMISSIONING OF ADDITIONAL TRAIN FOR HANDLING 20,000 BLPD WELL FLUID.

A. Introduction:

Sun Petrochemicals Pvt Ltd., (SunPetro) is an Oil & Gas company producing Oil & gas from its various Oil & gas fields located in the state of Gujarat.

SunPetro is presently operating following fields with 100 % Participating Interest:

- Bhaskar-I
- Hazira
- Baola
- Modhera

SunPetro is producing cumulatively about 7500 BOEPD from its fields.

In addition, SunPetro has been awarded 6 blocks/fields in offshore Gulf of Khambhat & Gulf of Kutch. The total acreage of the blocks is about 4500 Sq Km.

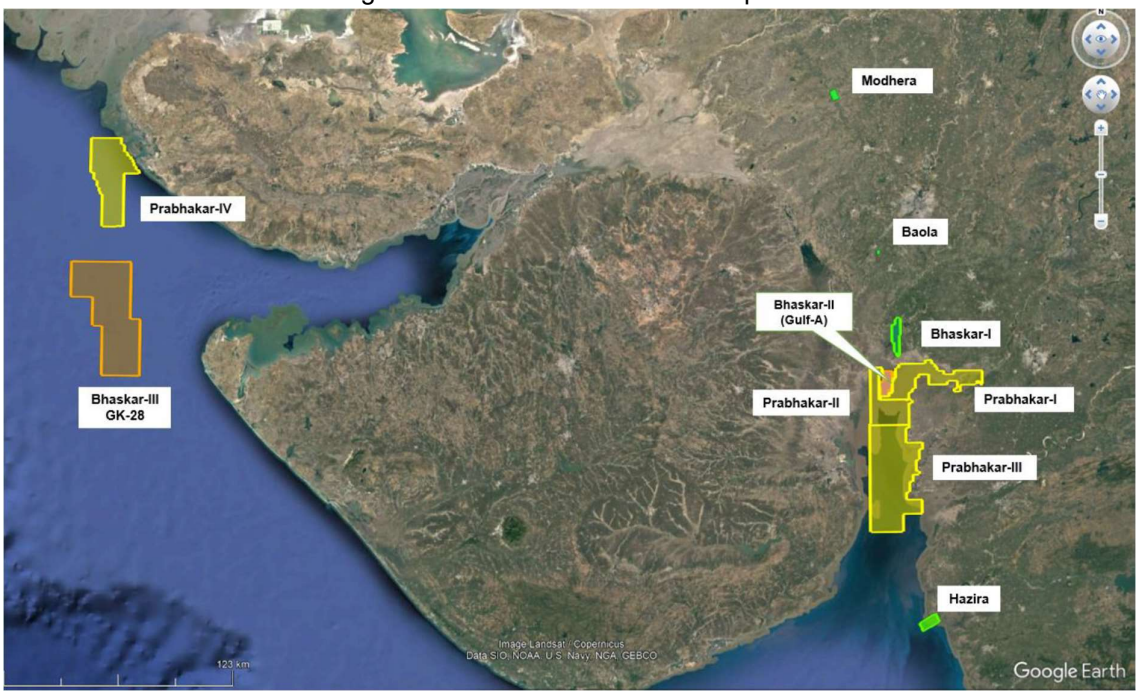

Fig-1, Overview of SunPetro fields

Bhaskar-I field is spread across and area of 72 sq.km near Khambhat, Anand district, Gujarat. The field is having presently around 21 producing wells and Central processing facility (CPF) and Water Injection plant. The well fluids from the wells are routed to CPF through collector pipeline (6”) for processing at CPF. The processed crude oil is stored in crude oil storage tanks and is pumped through 10” Export pipeline to IOCL Bareja Terminal. In addition, a Water injection plant is also installed in the field for pressure maintenance of the field.

The present scope of work is for Design, Engineering, Procurement, Fabrication, Transportation, Installation & Commissioning of Additional Train for Handling 20,000 BLPD Well Fluid along with the required heating facility and its integration with existing facilities in the plant.

B. Description of existing facility at CPF:

The processing capacity of existing train at CPF is as below:

I. Well fluid: 12,000 BLPD.

II. Gas: 50,000 SCMD (GOR: 25 v/v)

At the CPF the Well Fluid undergoes phase separation and is treated in HP, LP and Vapor recovery unit for achieving the Reid vapor pressure and water content requirement of the Crude Oil for export to the refinery. Produced water is further treated in Produced water treatment facility for its disposal in injection/disposal wells. Separated gas from the well fluid is routed to nearby consumers and is equipped with zero gas flaring system etc.

Apart from the above plant is equipped with other facilities like Firefighting system, Servo gas system, Fire and gas system, Distributed control system.

Fig-2, Location of Train 2 at CPF

C. Scope of Work for Additional process facilities (Train-2) at CPF:

a. Description

It is proposed to install an additional processing train (Train-2) at CPF next to existing Train-1 for handling additional production from field. The work involves design, engineering, procurement, fabrication, transportation, installation, hook up & commissioning of Train-2 and associated works.

Train-2 shall be designed for the following flowrate:

I. Well fluid: 20,000 BLPD.

II. Gas: 1,60,000 SCMD (GOR: 50 v/v)

Well fluid of Tran-2 shall be treated in the same manner as of Train-1.

Train-2 shall consist of the following components:

1. Surge Killer
2. HP separator
3. LP Separator
4. Well Fluid – Crude oil Heat Exchanger
5. Crude oil – Hot oil Heat Exchanger
6. Tank vapor recovery unit (TVRU) (Requirement added)
7. Hot oil unit with ~~use of existing expansion tank with increased capacity~~ Expansion tank of required capacity to handle Hot oil from both existing and new train to be provided. The existing structure shall be used for tank after strengthening or new support structure may be considered.
8. Interconnecting piping with valves
9. Hot insulation for vessels, exchangers, and piping
10. Instrumentation and controls, Hooking up with existing DCS (Emerson)
11. Electrical works and area lighting.
12. Mass flow meters for Crude Oil (Coriolis meter), Produced Gas (Orifice) & Produced Water (Orifice). Both the Trains shall have interconnection before HP Separator & after HP separator.
13. Fire Detection & Suppression System
14. Life Saving Appliances (Shower & Eye Wash Station)

b. Scope details:

1. Crude from the collector lines is made available at the outlet of Pig ~~Launcher/~~Receiver located adjacent to the existing Pig Launcher/Receiver for Bhaskar I field at CPF.
2. Interconnecting piping from Pig ~~Launcher/~~Receiver to inlet manifold and Surge ~~Killer~~ Controller.
3. 1 No. Surge Controller.
4. Interconnecting piping from outlet of 'Surge Killer' to inlet of 'HP Three Phase Separator'.
5. 1 No. HP Three Phase Separator.
6. Interconnecting crude oil piping from outlet of 'HP Three Phase Separator' to inlet of 'Well Fluid – Crude oil Heat Exchanger'.
7. For Servo Gas System: Piping connection from HP Separator to Servo Gas System.
8. 1 No. Well Fluid – Crude oil Heat Exchanger
9. Interconnecting crude oil piping from outlet of 'Well Fluid – Crude oil Heat Exchanger' to inlet of 'Hot Oil – Crude Oil Heat Exchanger'.
10. 1 No, Hot oil – Crude oil Heat Exchanger (Estimated capacity of 19,00,000 Kcal/hr) with 'On-Off' type controller.
11. Interconnecting crude oil piping from outlet of 'Hot Oil – Crude Oil Heat Exchanger' to inlet of 'LP Three Phase Separator'.
12. 1 No. LP Three Phase Separator.
13. Interconnecting hot oil piping from 'LP Three Phase Separator' to 'Well Fluid – Crude oil Heat Exchanger' and from 'Well Fluid – Crude oil Heat Exchanger' to the main piping header connected to 'Tank Vapour Recovery Column' ~~of Train-1~~.
14. Interconnecting piping from existing Train-1 manifold to inlet of HP Three Phase Separator for diverting Train-1 fluid to Train-2 as and when required. Similarly crude oil line from outlet of existing 'HP Three Phase Separator' to the outlet line of new 'HP Three Phase Separator' for diverting Train-1 crude to Train-2.
15. Piping for Produced gas from 'HP Three Phase Separator', 'LP Three Phase Separator' and 'Tank Vapor Recovery Unit' ~~(V-103, Train-1)~~ to Inlet of existing Knock-Out Drum (V-105) considering maximum 0.25 Barg pressure drop in the line.

16. HP Separator Gas Outlet line connection to Ejector Inlet
17. Interconnecting Piping within respective equipment / skid package.
18. Interconnecting produced water piping from 'HP Three Phase Separator', 'LP Three Phase Separator' & 'Tank Vapor Recovery Column' to existing 'Oily Water Separator Tank'.
19. Interconnecting piping for Gravity Chemical injection system (Vessel free issue by Sunpetro) with Process units.
20. HP Separator, LP Separator & Heat Exchanger bottom drain line connected to Closed Drain Vessel (V-104) through a common line.
21. PSV & BDV discharge shall be connected to Seal pot Inlet.
22. Signal Cable laying through tray.
23. Earthing strip connected to all vessels, Electrical Equipment to Earth Pit.
24. Control and signal cables for respective package terminated in Junction box mounted on respective skid package.
25. Control and signal cables from respective JBs on equipment / packages skid to existing SCADA system. All signal and control cables shall be laid in cable trays tray.
26. Lighting with required electrical power cables within the Train-2 area. Power supply for lighting in Train-2 area is provided from the lighting distribution board available near Train-2 area. Cables shall be laid in cable trays.
27. Adequacy check to be carried out for existing utilities like Firefighting system, Fire and gas system etc for Train-2.
28. Documentation for seeking approval for CTO and CTE from OISD, DGMS or any other government agency.
29. Separated gas shall be routed to existing flare line for diverting the same to the consumer / Flare and to the servo gas system after measurement.
30. The produced water from HP, LP and column shall be routed to existing produced water treatment system after measurement.
31. Insulation for Thermal and Personal protection
32. Required surface coating as per painting systems and colour coding.
33. Any other work required for successful commissioning of the plant.
34. The Crude oil from Vapor recovery unit shall be connected to the outlet of the existing Vapor recovery unit after measurement (CTM Skid - 02 Nos Coriolis meter to be provided in parallel for Calibration purpose) and shall be routed to Crude oil storage tanks. Similarly, separated gas shall be routed to existing flare line for diverting the same to the consumer / Flare and to the servo gas system after measurement.

Revised PFD of the proposed facility & its interconnection with existing facility is attached as Annexure-A

Bidders are requested to visit the CPF facility to understand the scope of work and its integration with existing facilities.

D. Facilities to be provided by SunPetro at Site:

Bidder shall be allotted an area of about 50 m X 50 m, close to the plant. Bidder shall create temporary infrastructure for site fabrication work and temporary storage for materials and office facility. Power shall be supplied free of charge to the contractor for fabrication work, however, the required cable and panel to be provided by the contractor.

E. List of applicable standards:

ANSI	American National Standards Institute
ASME	American Society of Mechanical Engineers
ASTM	American Society for Testing and Materials
API	American Petroleum Institute
ISA	International Society of Automation
NACE	National Association of Corrosion Engineers

IEC	International Electro-technical Commission
IEEE	Institute of Electronic and Electrical Engineers
ASCE 7-16	Minimum design loads and associated criteria for buildings and other structures
ASME Standards	
ASME B16.5	Pipe Flanges and Flanged Fittings
ASME B30.7	Base Mounted Drum Hoists
ASME B31.3	Process Piping
ASME B36.10M	Welded and Seamless Wrought Steel Pipe
ASME BPVC Sec V	Non-destructive Examination
ASME BPVC Sec IX	Welding Procedure and Performance Qualification
NORSOK M_501	Surface Preparation and Protective Coating
AACE	Recommended Practice 18R-97 Cost Estimate Classification system.
AGA BS 5781	Measurement and Calibration Systems Part-1
IS/IEC-60079	Electrical apparatus for explosive gas atmospheres – General Requirements
IS/IEC-61241	Electrical Apparatus for use in the presence of combustible dusts.
IS/IEC 62271-200	High-voltage switchgear and control gear – Part 200: AC metal-enclosed switchgear and control gear for rated voltages above 1 kV and up to and including 52 kV.
IS/IEC 62305	Lightning Protection
IEEE 519	Recommended Practices and Requirements for Harmonic Control in Electrical Power Systems
ISO/TR 12765	Measurement of fluid flow in closed conduits – Methods using transit time Ultrasonic flow meters
ISO 5168	Measurement of Fluid Flow – Estimation of uncertainty of a Flow Rate Measurement
ISA 5.1	Instrumentation Symbols and Identification
ISA 5.4	Instrument loop diagrams
ISA 5.5	Graphic symbols for process display
ISA 7.0.01	Quality standard for instrument air
ISA 12.04.01	Electrical apparatus for explosive gas atmospheres - part 2: pressurized enclosures "p”
ISA RP12.06.01	Recommended practice for wiring methods for hazardous (classified) locations instrumentation - part 1: intrinsic safety.
ISA 20	Specification forms for process measurement and control instruments, primary elements, and control valves
ISA 75.01.01	Flow equations for sizing control valves
ISA 75.08.01	Face-to-face dimensions for integral flanged globe-style control valve bodies (classes 125, 150, 250, 300, and 600)
ISA 75.08.02	Face-to-face dimensions for flange less control valve bodies (classes 150, 300 and 600)
ISA MC96.1	Temperature measurement thermocouples
ISA 18.2	Management of alarm systems for the process industries
ISA 75.17	Control valve aerodynamic noise prediction L.K. Spink Principles and Practice of Flow Metering Engineering R. Miller Flow Measurement Engineering Handbook

60079-0	Explosive Atmospheres Part 0: equipment – general requirements
60079-1	Explosive atmospheres - part 1: equipment protection by flameproof enclosures "d"
60079-2	Explosive atmospheres - part 2: equipment protection by pressurized enclosure "p"
60079-7	Explosive atmospheres - part 7: equipment protection by increased safety "e"
60079-11	Explosive atmospheres - part 11: equipment protection by intrinsic safety "i"
60079-14	Explosive atmospheres - part 14: electrical installations design, selection, and erection
60079-15	Electrical apparatus for explosive gas atmospheres - part 15: construction, test and marking of type of protection "n" electrical apparatus.
60079-25	Electrical apparatus for explosive gas atmospheres - part 25: intrinsically safe systems
60079-27	Explosive atmospheres - part 27: field bus intrinsically safe concept (fisco)
60079-29-1	Explosive atmospheres - part 29-1: gas detectors – performance requirements of detectors for flammable gases
60079-29-2	Explosive atmospheres - part 29-2: gas detectors – selection, installation, use and maintenance of detectors for flammable gases and oxygen.
60529	Degrees of protection provided by enclosures (IP code)
61508	All parts - functional safety of electrical/electronic/programmable electronic safety related systems
61511	All parts - functional safety - safety instrumented systems for the process industry sector
61000	All parts - electromagnetic compatibility (EMC)
60751	Industrial platinum resistance thermometers and platinum temperature Sensors
60584	Thermocouples
60534	Industrial-process control valves
61158	All parts - industrial communication networks – field bus specifications
60228	Conductors of insulated cables
EN 54	All parts - fire detection and fire alarm systems
ISO EN 5167	Measurement of fluid flow by means of pressure differential devices.
ISO EN 4126	All parts: safety devices for protection against excessive pressure
EN ISO 15848-1	Industrial valves - measurement, test and qualification procedures for fugitive emissions - part 1: classification system and qualification procedures for type testing of valves
EN ISO 10497	Testing of valves - fire type-testing requirements
NFPA 10	Standard for Portable Fire Extinguishers
NFPA 11	Standard for Low, Medium, and High-Expansion Foam NFPA
NFPA 12	Standard for Carbon Dioxide extinguishing Systems.
NFPA 14	Standard for the installation of Standpipe and Hose System

NFPA 15	Standard for Water Spray Fixed Systems for Fire Protection
NFPA 17	Standard for the Dry Chemical Extinguishing System
NFPA 24	Standard for the Installation of Private Fire Service Water Mains
NFPA 72	National Fire Alarms and Signalling Code
NFPA 2001	Standard on Clean Agent Fire Extinguishing Systems
NFPA 11	Standard for Low, Medium, and High-Expansion Foam NFPA
NFPA 70	National electric code (NEC)
NFPA 85	Boiler and combustion systems hazards code
NFPA 496	Purged and pressurized enclosures for electrical equipment in hazardous (classified) locations.
OISD-STD-109	Process Design and Operating Philosophies on Blow Down & sewer system
OISD-RP-110	Recommended Practices on Static Electricity
OISD-STD-111	Process Design & Operating Philosophies on Fired Process Furnace
OISD-STD-113	Classification of Area for Electrical Installations at Hydrocarbon Processing & Handling Facilities
OISD-STD-114	Safe Handling of Hazardous Chemicals
OISD-GDN-115	Guidelines on Fire Fighting Equipment and Appliances in Petroleum Industry
OISD-STD-116	Fire Protection Facilities for Petroleum Refineries and Oil/Gas Processing Plants
OISD-STD-117	Fire Protection Facilities for Petroleum Depots, Terminals, Pipeline Installations & Lube oil installations
OISD-STD-118	Layouts for Oil and Gas Installations
OISD-RP-149	Design aspects for safety in electrical systems
OISD-STD-152	Safety Instrumentation for Process System in Hydrocarbon Industry
OISD-STD-163	Safety of Control Room in Hydrocarbon industry
OISD-STD-164	Fireproofing of Steel Supporting Structures in Oil & Gas Industry
OISD-GDN-180	Lightning Protection
OISD-STD-186	Simultaneous Operations in E&P Industry
OISD-GDN-192	Safety Practices during Construction
OISD-GDN-207	Contractor Safety

Note: All works shall be executed as per good engineering practices.

F. Completion Schedule

Project should be completed in every respect and ready for commissioning within a period of 12 months from placement of LOI.

SECTION-5A

RESPONSIBILITY MATRIX

Sl. No.	Aspect		Description	Responsibility	
				SunPetro	Contractor
1	Design & Engineering	A	Testing of soil for design of civil foundation	---	√
		B	Civil Foundation for HP-Separator, LP-Separator, Heat Exchanger (2 no), Crude oil stabilizing vessel, Hot oil unit & Tag Structure	---	√
		C	Piping size calculation, Stress calculation, Supports load calculation & Tag structure load calculation.	---	√
		D	Structural steel design	---	√
		E	HP-separator, LP-separator, Tank Vapour recovery Unit & Heat Exchanger, Hot oil unit with elevated Expansion tank and design of support structure for expansion tank ~~with increase capacity~~	---	√
		F	Skid Layout, Tag Structural, Piping layout, Piping GAD, Pipe support & Isometrics	---	√
		G	Electrical cable route Drawing	---	√
		H	Instrumentation & Control for each Unit, GAD & isometric	---	√
		I	Integration with DCS	---	√
		J	Shutdown & Control valves	---	√
		K	Hookup with DCS	---	√
		L	Sizing of Flare line upto Flare KOD, ~~Flare tip, Seal Pot, and Consumer line~~ as per applicable standards	---	√
		M	Fire & Gas safety study & its implementation	---	√
		N	Participation in HAZOP study and closing of observations	---	√
		O	Native files of all the software used for designing shall be submitted to Client	---	√
		P	Updating of area classification drawings	---	√
2	Adequacy check	A	Firefighting system	---	√
		B	Fire water network	---	√
		C	Fire hydrant/Monitor	---	√
		D	UPS	---	√
		E	DCS	---	√
3	Utilities/Lifting equipment	A	**Fabrication yard for the prefabrication works and storage. (~ 50 m X 50 m, as per availability)**	√	---
		B	**Skid Lifting Tool & tackles.** (Lifting lugs, Spreader Bar, slings, Tackles, as applicable)	---	√
		C	Utility Consumption list	---	√
		D	Lifting Equipment required at CPF	---	√
		E	Power Supply	√	---
		F	Water Supply (Disposal water)	√	---

		G	Man & Material Transportation	---	√
4	**Supply & Installation of Process Packages, Equipment, Piping, Valves, Fittings, Electrical and instrumentation**	A	Inlet Manifold with 18", 8" tie-in point, and spare tie-in point for future inlet connection. And spare tie-in point at outlet for connection to existing train.	---	√
		B	Surge ~~killer~~ Controller	√	----
		C	HP separator consists of following elements. 1. Hydrocyclone inside the vessel 2. Sacrificial anode 3. Sparger for removal of bottom sediments Note: HP Separator shall be skid mounted at the outlet of surge killer	---	√
		D	LP separator consisting of following elements. 1. Hydrocyclone inside the vessel 2. Sacrificial anode 3. Sparger for removal of bottom sediments Note: LP Separator shall be skid mounted at the Highest elevation above the heat exchangers. Structure for the same shall be in scope of the bidder.	---	√
		E	Tank Vapor recovery column (Dia.- 2m, Height- 16 m. Schematic attached)	---	√
		F	Hot oil unit and elevated Expansion tank suitable for both the trains & its integration with the existing hot oil unit and with both the trains (estimated heat duty 1900000 Kcal/hr, however, contractor shall carryout design and engineering for the requirement of heat duty for both the existing & new train along with Hot oil recirculation pumps (1W+1S/by)). Modification ~~of existing expansion tank along with~~ & strengthening of structural support with required elevation.	---	√
		G	Shed for Hot oil unit	√	---
		H	Tie-in point with associated piping for Chemical injection system at inlet of HP separator (Demulsifier) at 6 o'clock and 12 o'clock with ½ " Ball valves for Gravity injection system.	---	√
		I	Gravity feed chemical injection skid (free issue)	√	---
		J	Tie-in point with Chemical dosing pump (metering type), 8 – 50 LPH @ 7 Barg maximum (1W+1S/by) with flame proof motor and associated piping for Chemical injection system at outlet of LP separator (PPD).	---	√
		K	Tag structure for equipment	---	√
		L	Ejector for recovering low pressure gas from the Vapor recovery column	√	---
		M	Installation and hooking up of Ejector	---	√
		N	Pipe, Valves, fittings, structural material	---	√
		O	Power cable, cable tray, supports, VFDs, heat tracing	---	√
		P	Control valves, shut down valves, pressure gauge, temperature gauge, pressure transmitter, temperature transmitter, signal cable, junction box, PSV, PRV, Blow down valve	---	√
		Q	Mass flow meters for crude oil (Coriolis meter), gas(Orifice) & produce water(Orifice)	---	√

		R	Eye wash system	---	√
		S	MCP (manual call point)	---	√
5	QA / QC	A	TPI Agency	√	---
		B	QAP	---	√
		C	FAT / SAT	√	√
		D	ITP	---	√
6	Civil	A	Construction of Civil foundation as per Approved Design	√	---
		B	Fabrication & installation of steel structure for mounting various packages as per the required elevation.	---	√
		C	Supply & Grouting of Anchor Bolt as per Design.	---	√
		D	Inspection & acceptance of Civil foundation for erection of equipment	---	√
7	General	A	Surface Coating as specified	---	√
		B	Flushing & cleaning of equipment and piping	---	√
		C	Passive fire protection cement coating of support structure of process equipment.	---	√
		D	Transportation of Free issue equipment from Workshop to Location and installation.	---	√
		E	Supply of spare Gaskets (400%) & Fasteners (200 %).	---	√
		F	Arrangement of material handling equipment at site as per requirement.	---	√
		G	Thermal Insulation for 'Hot oil unit', Hot oil piping, 'LP separator', 'LP separator' to 'Well Fluid-Crude Oil Heat Exchanger' piping, 'Hot Oil-Crude Oil Heat exchanger' to LP Separator inlet,	---	√
		H	Hook up & Integration of Train-2 with existing Train-1	---	√
		I	Pre-Commissioning of Unit/System including inertization of system.	---	√
		J	Presence of vendor during commissioning	---	√
		K	Functional Test of Control System through DCS	---	√
8	Instrumentation	A	Functional test of Instrumentation during FAT	---	√
		B	Supply & Laying of Control cables from Unit to DCS at Control Room.	---	√
		C	Supply and Erection of Cable tray	---	√
		D	Fire detection, Gas detection system	---	√
		E	Earthing Connection, Earth Pits	---	√
		F	Hook up & Integration with DCS (Delta V) & Functional Test	---	√
		G	Cause & Effect Functional Test	---	√

		H	Interlocking System Functional Test through DCS	---	√
9	**Electrical**	A	Electrical Power cable supply and laying for Power Supply 415V, 220 V (AC) & 24 &12 V (DC).	---	√
		B	Earthing Connection to Vessel & JB, Earth Pits	---	√
		C	Supply and Erection of Cable tray	---	√
		D	Area Illumination	---	√
10	**Tie-in/Hot tapping**	A	18" & 8" line with Inlet manifold	---	√
		~~B~~	~~Hot tapping with tank vapor recovery column outlet line (12")~~	~~---~~	~~√~~
		C	Flare line	√	√
		D	Produce water line	√	√
		E	Disposal water line	√	√
		F	Fuel gas inlet for Hot oil unit	√	√
11	**Commissioning**	A	Supply of Commissioning & two years' spares (extra)	---	√
		B	Site Acceptance test	√	√
		C	Pre-Commissioning / Commissioning	√	√
		D	HOTO Process	√	√
12	**HSE Consideration**	A	HAZOP Study	---	√
		B	PPE supply during Construction, Erection & Commissioning Activities.	---	√
		C	ERP for Construction Activities.	√	√
		D	Cause & Effect matrix	---	√
		E	Waste Management during Construction & Erection	---	√
		F	SIMOPS	---	√
13	**Records & Document**	A	As Built Drawings, Data sheet & Documents with Native files	---	√
		B	Material Test Certificates	---	√
		C	Vessel Hydro Test Certificates	---	√
		D	NDT reports.	---	√
		E	Instrument Calibration Certificates	---	√
		F	PSV calibration Certificate	---	√
		G	Anode Material composition Certificates	---	√
		H	HOTO signed Document	√	√
		I	3D Model with Native files	---	√

SECTION – 7A

PRICE SCHEDULE

PRICE SCHEDULE					
DESIGN, ENGINEERING, PROCUREMENT, FABRICATION, TRANSPORTATION, INSTALLATION & COMMISSIONING OF ADDITIONAL TRAIN FOR HANDLING 20,000 BLPD WELL FLUID AT CPF					
	Item/ Description of Work/Activity	**UOM**	**Rate in INR**	**QTY**	**Amount**
A-DESIGN & ENGINEERING					
A1	Design & Engineering for additional processing train (Train-2).	Lumpsum		-	
B- Equipment Packages					
B1	Skid Mounted HP three phase separator (Including gas measurement)	No		1	
B2	Skid Mounted LP three phase separator (Including gas measurement)	No		1	
B3	Skid Mounted Well fluid - Crude Oil Heat Exchanger	No		1	
B4	Skid Mounted Crude Oil - Hot oil Heat Exchanger	No		1	
B5	Tank Vapour Recovery Column	No		1	
B6	Hot Oil Unit with Expansion tank and modification ~~of existing expansion tank along with~~ & strengthening of structural support or new support structure	No		1	
C- Procurement					
C1	Procurement of pipes, fittings, Valves, and any other material required	Lumpsum		L.S	
C2	Procurement of Electrical Power cables, Lighting, Cable trays and any other material required	Lumpsum		L.S	
C3	Procurement of Instrument control cables, instruments, JB, Supports and any other material required	Lumpsum		L.S	
C4	Procurement of any other materials as per design required for commissioning of plant.	Lumpsum		L.S	
C5	Procurement of Support Structures for Processing units/equipment	Lumpsum		L.S	
C6	Procurement Surface Coating material	Lumpsum		L.S	
C7	Procurement thermal insulation material	Lumpsum		L.S	
C8	Procurement of First fill of Hot Oil	Lumpsum		L.S	
C9	Procurement of Custody transfer metering Skid with control panel (Coriolis type) with 02 Nos (Emerson Make) meters in parallel	No		1	
D- Installation					
D1	Fabrication, Installation, and erection of Structure for Processing units/Packages	Lumpsum		L.S	
D2	Installation of Surge ~~Killer~~ Controller	Lumpsum		1	
D3	Installation of Skid Mounted HP three phase separator	Lumpsum		1	
D4	Installation of Skid Mounted LP three phase separator	Lumpsum		1	
D5	Installation of Skid Mounted Well fluid - Crude Oil Heat Exchanger	Lumpsum		1	
D6	Installation of Skid Mounted Crude Oil - Hot oil Heat Exchanger	Lumpsum		1	
D7	Installation & Erection of Tank Vapour Recovery Column	Lumpsum		1	

D8	Installation of Hot Oil Unit with Expansion tank and modification ~~of existing expansion tank along with~~ & strengthening of structural support or new support structure	Lumpsum		1	
D9	Fabrication, Installation, and erection Structural works including supports	Lumpsum		L.S	
D10	Installation of piping, fittings, valves etc.	Lumpsum		L.S	
D11	Installation of Instruments, control valves, Shutdown valves, MOVs, JB etc	Lumpsum		L.S	
D12	Control Cable laying	Lumpsum		L.S	
D13	Integration of inputs of Train-2 with existing DCS	Lumpsum		L.S	
D14	Electrical cable Laying	Lumpsum		L.S	
D15	Electrical works (lighting, Cable tray installation etc)	Lumpsum		L.S	
D16	Surface coating including Passive fire protection coating	Lumpsum		L.S	
D17	Thermal Insulation and Cladding	Lumpsum		L.S	
D18	Installation of Custody transfer metering Skid with control panel (Coriolis type) with 02 Nos (Emerson Make) meters in parallel	No		1	
	Sub - Total				
	GST				
	Total				

NOTE:

1. Price shall be inclusive of all taxes and duties except GST/IGST which will be paid extra as applicable.
2. The above rates are inclusive of all charges including transportation cost till our specified site location in Gujarat. No additional charges towards freight / transportation / insurance / loading / unloading etc. shall be payable.
3. The above prices shall be inclusive of all considering delivery, installation, commissioning & testing at designated site of Sun Petro.
4. All packages must bear labels mentioning name of product, name of manufacturer, date of manufacturing, batch no, tare weight, gross weight and net weight of material.
5. Delivery Period: As per SOW.
6. **Warranty Period:**
   Eighteen (18) months from date of supply or Twelve (12) months from date of commissioning whichever is earlier. However, bidder can quote the warranty period beyond 18 months. Bidder to specify visits of the operator during warranty period for routine checkups and troubleshooting.
7. **Payment Schedule**
   Refer 3.29.8 of Section-3 (Model Contract).
8. Delivery Address:

➢ **Bhaskar Field**
Sun Petrochemicals Pvt. Ltd. (SunPetro). Bhaskar Field, Central Processing Facility (CPF), Pandad-Tamsa Road, Village: Pandad, Tal: Khambhat, Dist: Anand, Gujarat – 388625.

9. **Documents to be submitted at the time of delivery**
   Original – Challan/Packing List, Invoice, Consignment Note/ Bill of Lading/ Air Waybill, Inspection Certificate, Material Test Certificate if any, Guarantee/Warranty Certificate, Installation Manuals, and any other supporting documents.
10. **Note for Essential Certificate**
    Bidder is required to confirm from SunPetro prior to delivery of Material for availability of Essentiality Certificate (EC) for availing zero customs duty / concessional taxes benefit.

    All documents, as applicable to be sent at least two (2) weeks prior to SunPetro by email to enable SunPetro to initiate obtaining Essentiality Certificate to avail zero customs duty / concessional taxes benefit.

Process Flow Diagram
(Enclosed)

CPF EXPANSION - PRODUCED OIL STREAM

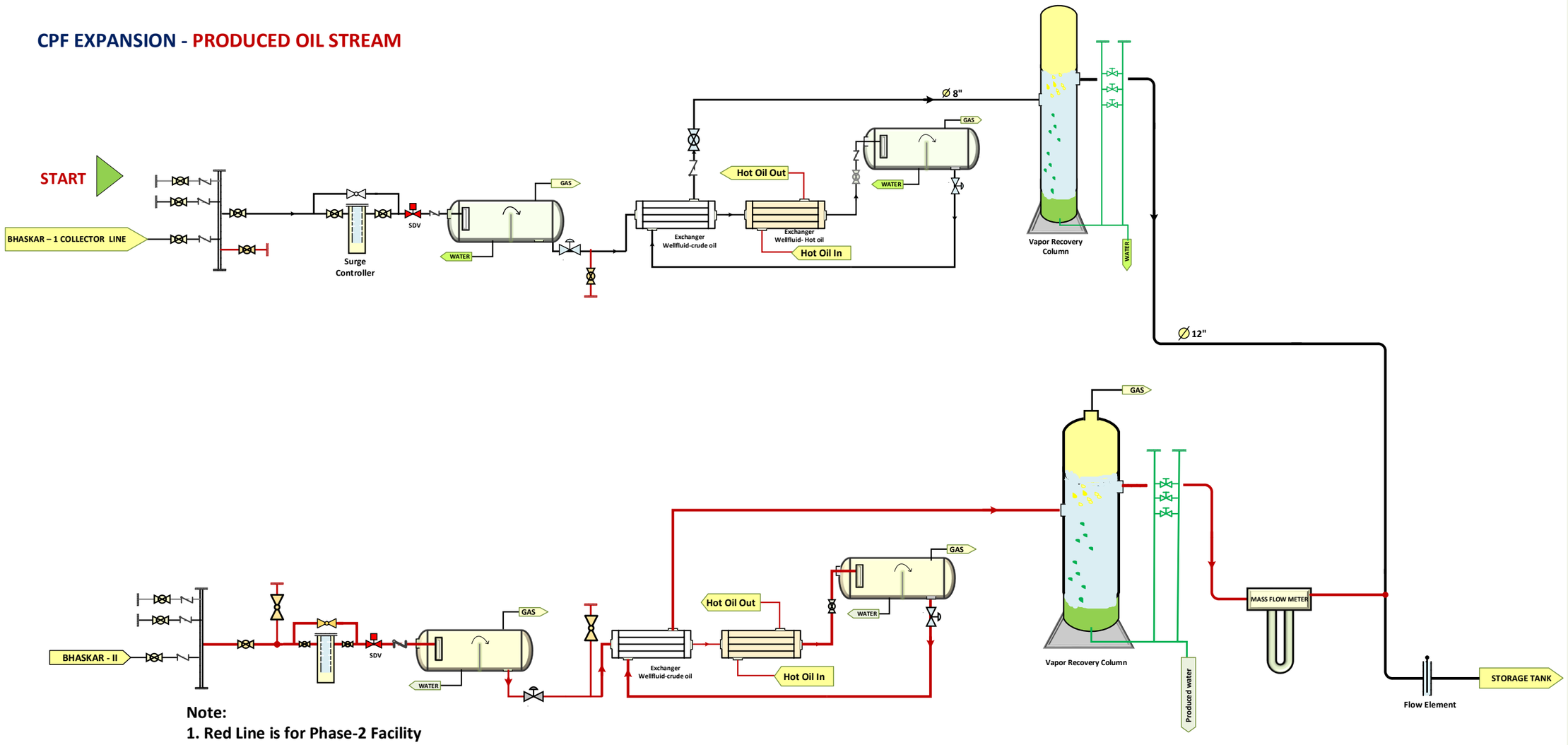

Note:

1. Red Line is for Phase-2 Facility
2. Black Line is for Existing Facility

CPF EXPANSION - PRODUCED GAS STREAM

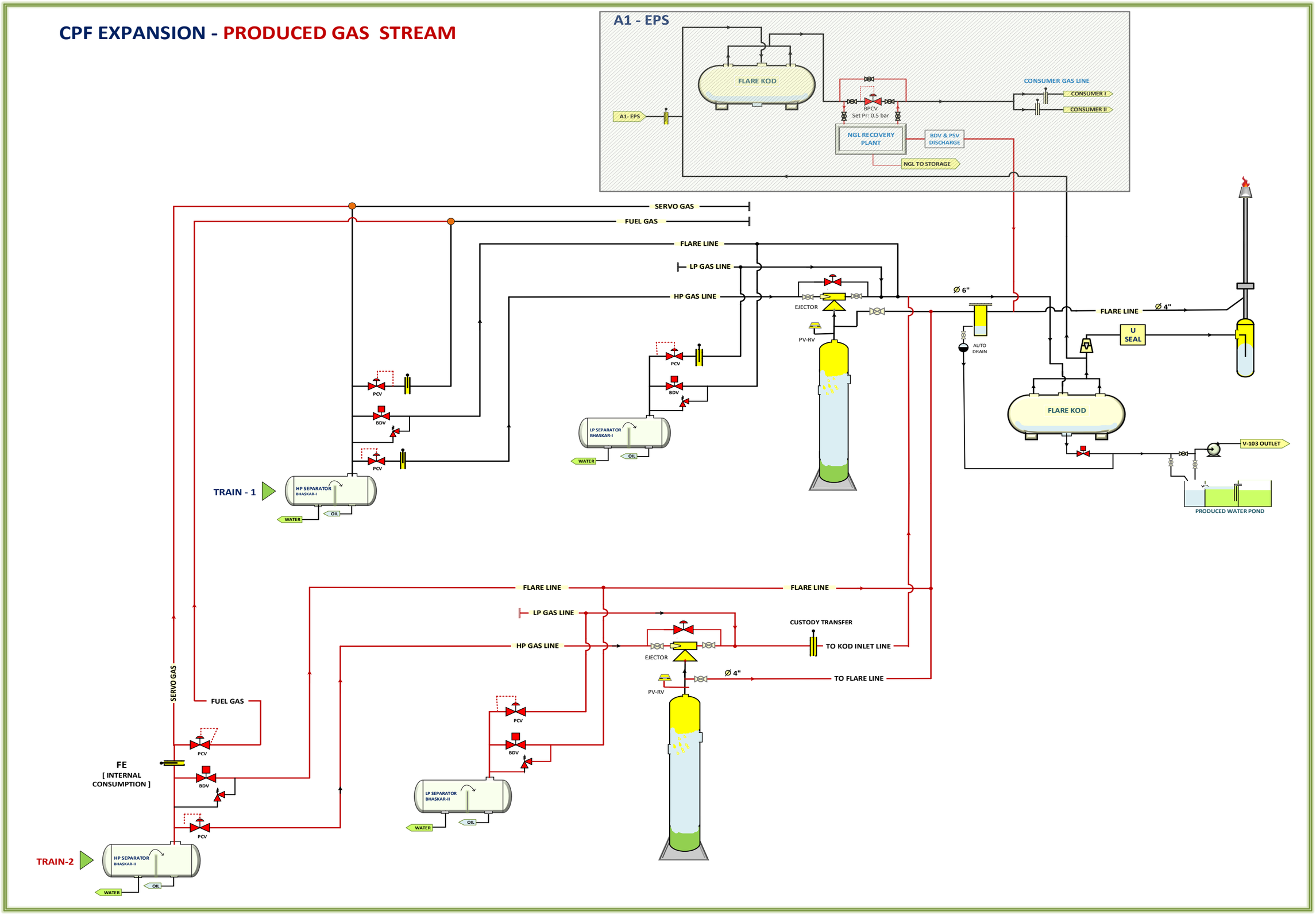

CPF EXPANSION - PRODUCED WATER STREAM

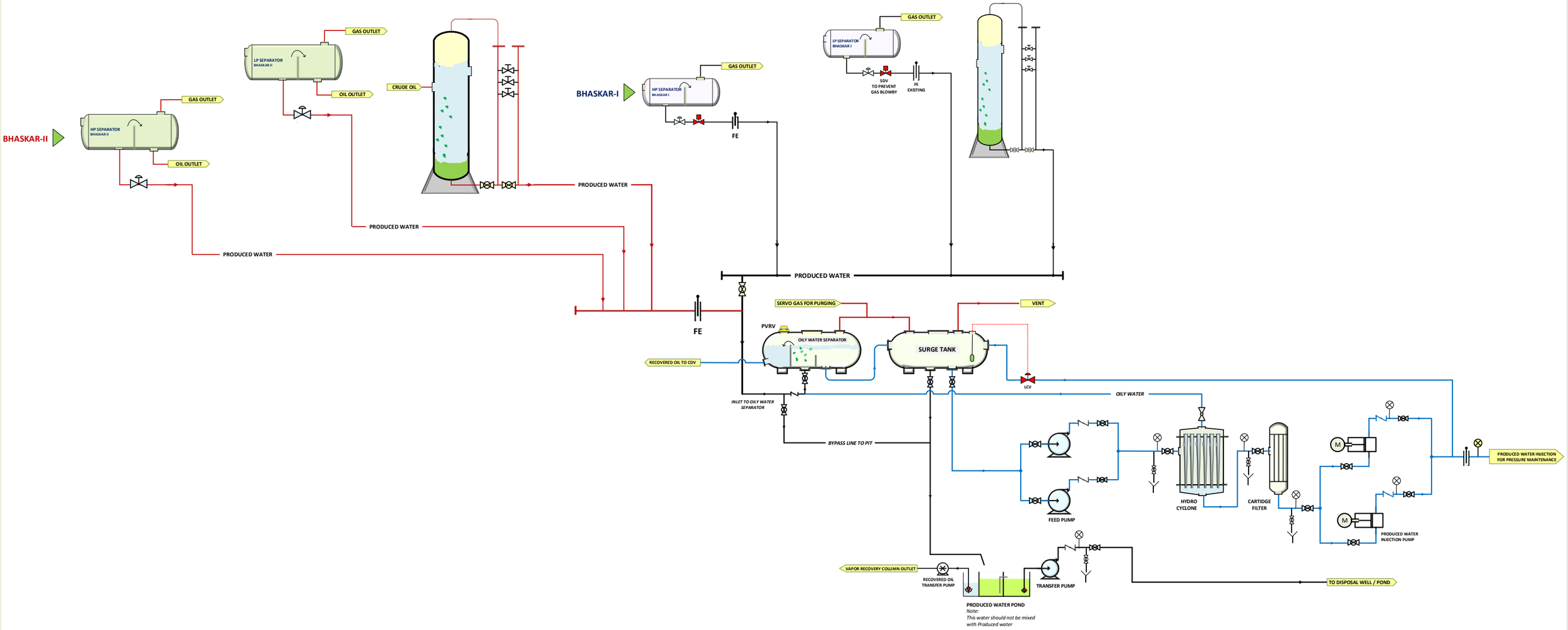

NEW & OLD HOT OIL UNITS INTEGRATION

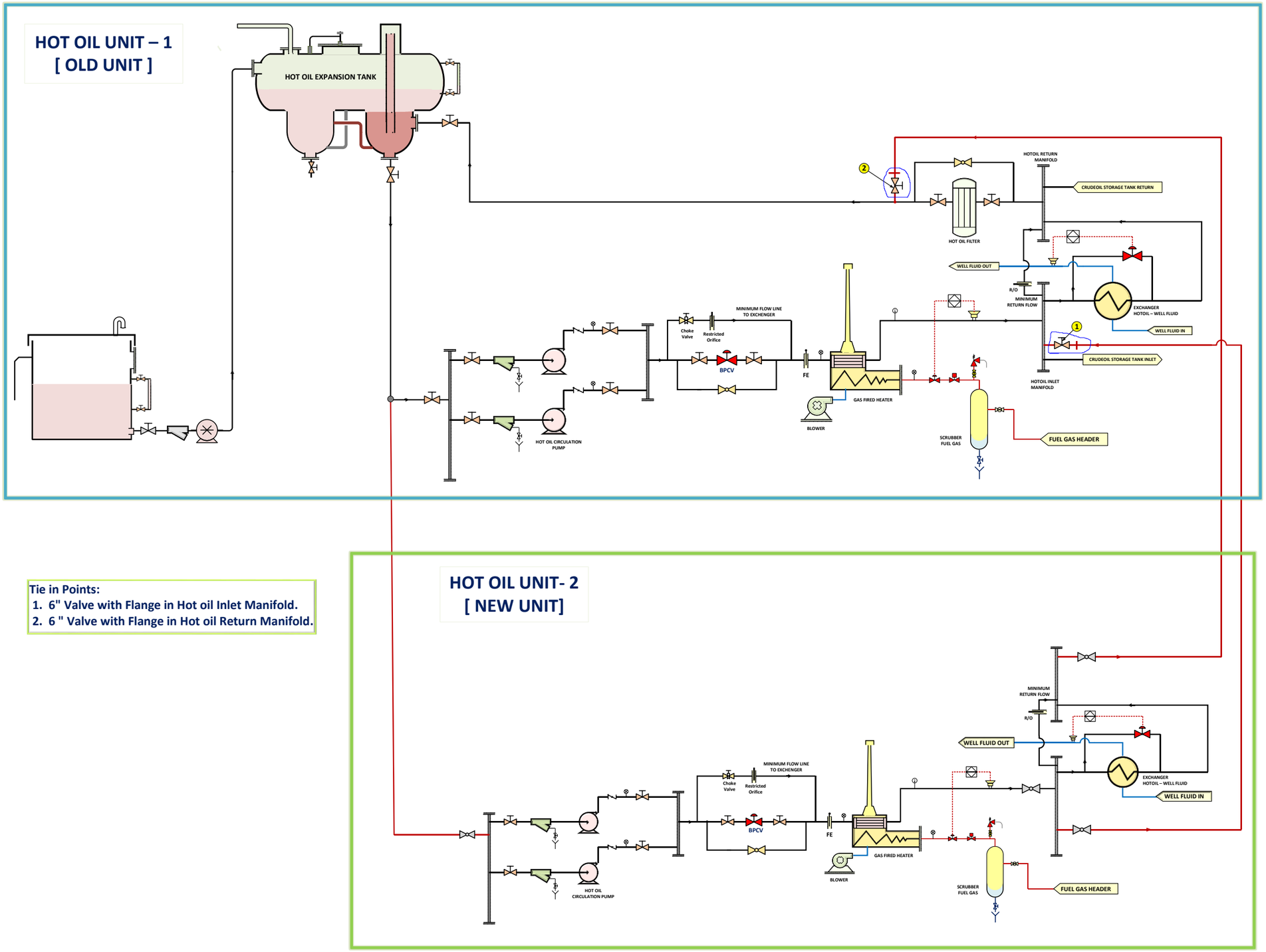

Tie in Points:

1. 6" Valve with Flange in Hot oil Inlet Manifold.
2. 6 " Valve with Flange in Hot oil Return Manifold.